Reg. No. [ ] [ ] [ ] [ ] [ ] [ ] [ ] [ ] [ ] [ ] [14EE33]

THIRD SEMESTER B.TECH EXAMINATION, DECEMBER-2015

ELECTRONIC DEVICES AND CIRCUITS

Time:3 Hours **Maximum Marks:70**

Instructions : Answer five full questions, choosing at least TWO from each part.

PART - A

1. a. Explain with necessary graphs and expressions, the static and dynamic resistances of a forward biased Pn junction diode. **06**

   b. In a centre – tapped full wave rectifier, if the secondary of the transformer has a voltage V=15 sin 100 t, find the dc output voltage; power consumed by the load, rectification efficiency and output frequency of the rectifiers. The silicon diodes used are assumed to have a forward resistance of 15Ω each and load resistance is 1.5 KΩ. **04**

   c. With the neat circuit diagram and relevant waveform, explain the working of double ended clipper. **04**

2. a. Explain the working of fixed bias circuit with a neat diagram and derive the expressions for its I_B, I_C and V_{CE}. **08**

   b. For the circuit shown in Fig. 2(b), determine **06**

   i. I_B

   ii. I_C

   iii. V_{CE}

   iv. V_C

   v. V_E

   vi. V_B and

   vii. V_{BC}

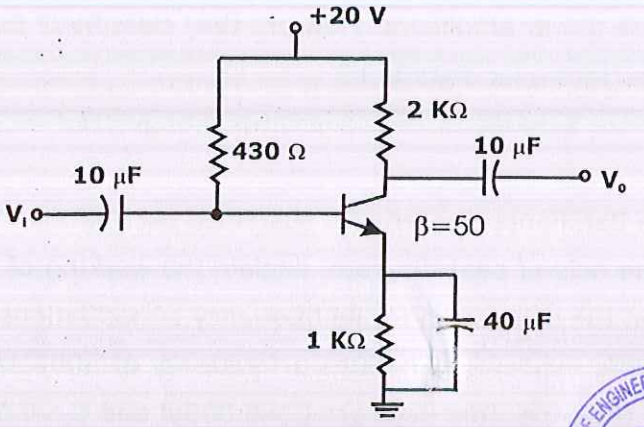

Fig. 2(b)

SCHOOL OF ENGINEERING & TECHNOLOGY LIBRARY DATE JAIN UNIVERSITY-BANGALORE

3. a. Explain the need for transistor modeling. **02**

   b. Using hybrid equivalent model, derive hybrid parameters. **12**

4 a. Prove that the Miller effect capacitance $C_{Mi}=(1-Av)C_f$. **05**

b. With a neat diagram, explain the frequency response of two stage transformer coupled amplifier. **05**

c. Explain the effect of coupling (both input and output) and bypass capacitors of CE amplifier in voltage divider biasing configuration on its low frequency performance. **04**

PART - B

5. a. Explain the need for cascading the amplifiers. **02**

b. What is cascade connection? Explain cascade connection with neat diagram. **06**

c. What is a current mirror circuit? Explain current mirror circuit with the help of neat circuit diagram. **06**

6. a. Draw the block diagrams of different types of feedback connections. **04**

b. Mention the advantages of negative feedback. **04**

c. Calculate the voltage gain for the current series feedback amplifier shown in Fig. 6(c). **06**

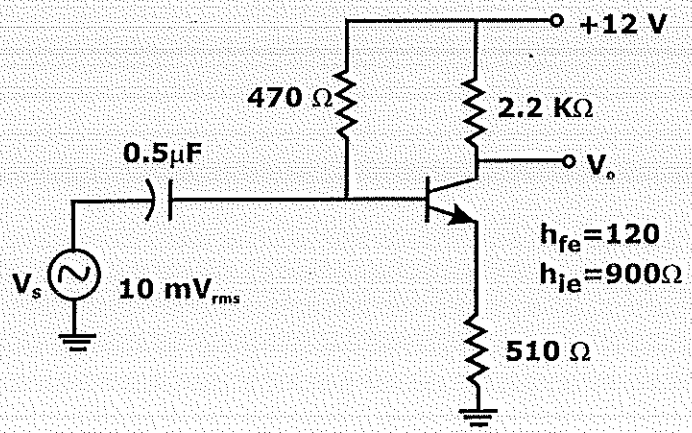

Fig. 6(c)

7. a. What are power amplifiers? How are they classified? Explain. **06**

b. What is cross over distortion? **02**

c. Explain the working of class B push-pull amplifier. **06**

8. a. Explain Barkhausen criteria for sustained oscillations. **04**

b. With the help of neat diagram, explain the working of RC-phase shiftoscillator and mention the expression for its frequency of oscillations. **06**

c. A Colpitt's oscillator generates a frequency of 500KHz. Find the value of inductor used if the capacitors used are C_1=0.005μf and C_2=0.006μf. **04**